POWER HARROWS

ALPEGO

WE HAVE CREATED A COMPLETE SYSTEM BECAUSE HAVING THE BEST STEEL IS NOT ENOUGH.

The sticker "ALPEGO INSIDE" on all machines, certifies the high quality of Alpego's products. An union of first quality materials, eco-sustainable coating process and certified welding that guarantees an exceptional durability and quality over the years.

HIGH STRENGTH STEEL

All Alpego machines use the best steel to reduce weight and increase work performance, this maximizing both consumption and operating costs. This has a great impact on environmental sustainability as well.

ECO PAINTING

A unique system of its kind throughout Europe, which allows each component to be painted with the most suitable process and in full respect for the environment. The paints used, in fact, are water-based and powder-based and do not produce emissions of VOC (Volatile Organic Compounds).

CERTIFIED WELDING

For more than twenty years the exceptional durability of Alpego structural components has been guaranteed by the effectiveness of welds made by highly qualified personnel in accordance with standardized processes certified by the National Welding Institute.

A complete range for all needs

Three types of mechanics for a complete range up to 8 meters wide

Rotary power harrows have been for many years the most flexible professional machines for soil cultivation thanks to their ability to adjust to all types of soils and situations. Moreover, their possibility to be combined with a seed drill represents a further advantageous solution even in the seed-drilling process.

BD2
HP 40-120
Page 22

RM
HP 80-170
Page 25

TWIN FORCE

RK
HP 90-200
Page 26

TWIN FORCE

BE
HP 60-120
Page 23

BF
HP 65-140
Page 24

RMAX
HP 120-320
Page 27

TWIN FORCE

DKTOP
HP 130-350
Page 16-17

TWIN FORCE

DJ
HP 90-220
Page 14

DP
HP 120-270
Page 15

DMAX
HP 180-500
Page 18-19

TWIN FORCE

Alpego mechanics

Unique and powerful

SFERA

Light weight and durable

SFERA

The ball-bearing mechanics is mounted on a wide range of power harrows, up to 6 meter wide and it offers ecellent structural performances. The machines equipped with this kind of solution are ideal for the preparation of the sedbed.

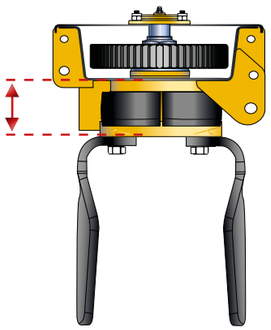

STANDARD POWER HARROW
Ballbearing

TWIN FORCE K

The patented Twin Force K, used in the professional models is ideal for deep soil cultivation and combined machines. The machines equipped with this type of mechanics are suited to be used with high-power tractors.

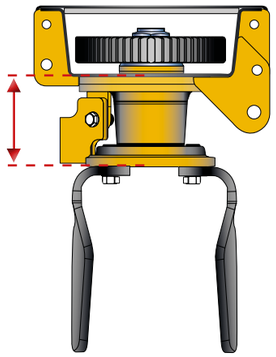

TWIN-FORCE "K"
Standard power harrow + 60 mm

TWIN FORCE MAX

The patented solution Twin-Force MAX, used in the top-of-the-range professional models further improves the structural features and yields the utmost reliability in the use of very high power tractors of up to 500 HP.

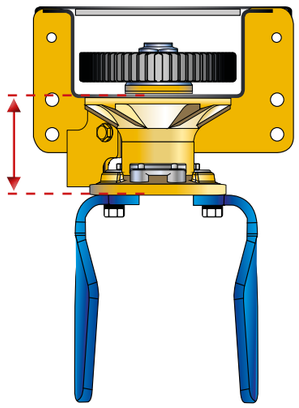

TWIN-FORCE "MAX"
Standard power harrow + 100 mm

The power harrows with ball-bearing mechanics manufactured by Alpego guarantee high performances on models of limited weight for tractors of up to 270 HP.
The features of these mechanics are:
1) shaft with a surface treatment
2) dual inline ball bearings
3) upper ball bearing is on axis with the gearbed
4) upper grease nipple to insure lubrication
5) the rotor support is screwed on
6) guard against foreign bodies is supplied standard
7) half-rock guards mounted on a plate
8) maze-shaped dust protection

The entire structure is crewed on from the top, which makes future maintenance procedures easier.

PRESENT ON THE FOLLOWING MODELS:

BD2

BE

BF

DJDJ

DP

ROTOR TIMING SEQUENCE:
All the supports of the tines mounted on the power harrows we manufacture follow a very precise sequence. This prevents vibrations of the transmission organs with the resulting decrease of the absorbed power.

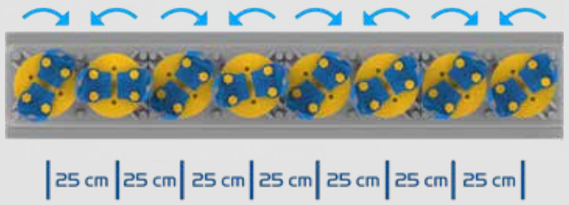

TYPES OF TINES:
The right tine for every need. The experience of many years in the field has led Alpego to develop a wide range of tines suited for the most varied uses. The special shape and angle of inclination guarantee an excellent crumbling with a decreased amount of power absorpion.

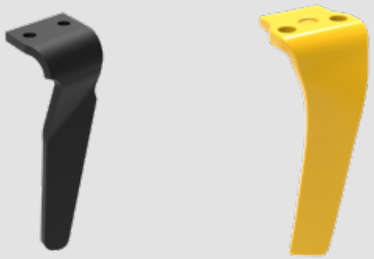

AVAILABLE TINES:

STANDARD LAMINATED TINE

QUICK-REPLACEMENT LAMINATED TINE

HALF-ROCK GUARDS
The half-rock guards not only protect the rotors from wear and tear, they also improve the crumbling degree of the soil and the work quality.

TWIN FORCE K

Fast and powerful

The patented Twin-force K system consists of 2 rotors held together by a single support for double strength. It presents Timken self-lubricating tapered roller bearings which, combined with carburised gears, guarantee the utmost reliability of the transmission.
The power harrow thus equipped makes it possible to reach exceptional performances in terms of:

- Increased working depth
- Higher forward speed
- Utmost exploitation of the available tractor power
- Highest reliability and minimum maintenance

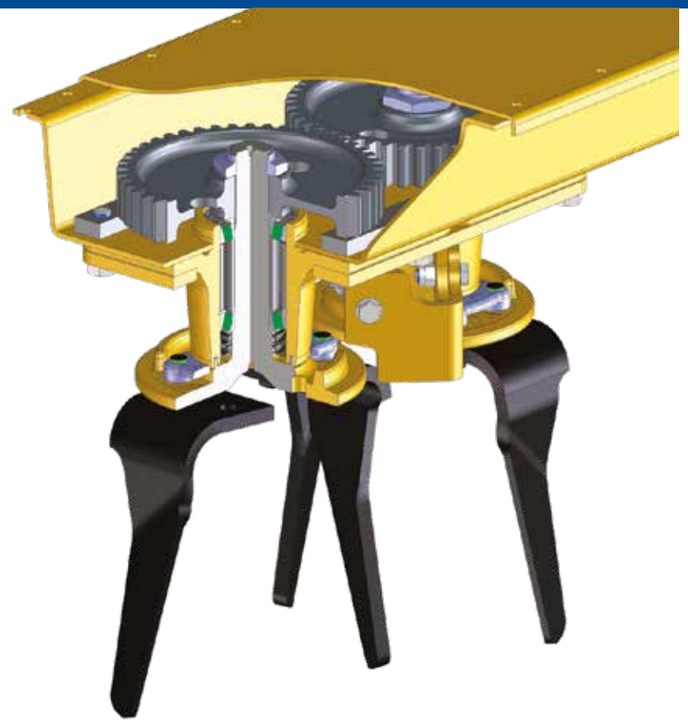

AVAILABLE TINES:

STANDARD LAMINATED TINE

QUICK-REPLACEMENT LAMINATED TINE

QUICK-REPLACEMENT FORGED TINE

QUICK-REPLACEMENT FORGED TINE PLUS

PRESENT ON THE FOLLOWING MODELS:

RM

RK

DKTOP

TWIN FORCE MAX

Incredibly efficient

The top-of-the range machines are equipped with the patented Twin-Force MAX mechanics.
This solution enhances the features of the "K", thanks to a better lubrication, a sturdier structure and an increased free span.
The power harrow thus equipped makes it possible to reach exceptional performances in terms of:

- Increased working depth
- Higher working capacity
- Use under extremely difficult conditions
- Highest reliability
- Minimum maintenance
- Designed and developed to exploit tractors of very high power

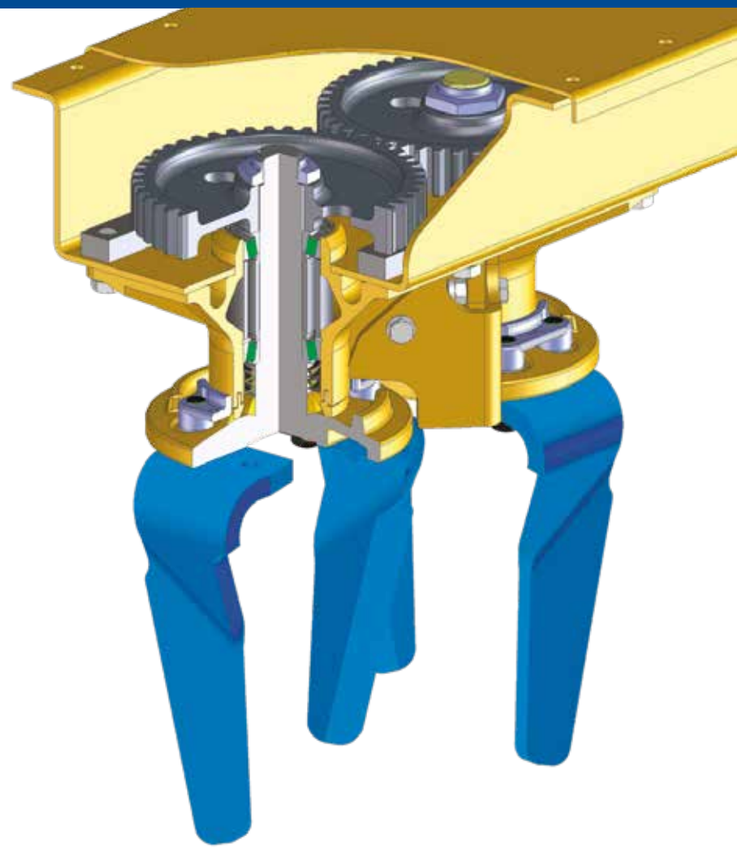

AVAILABLE TINES:

FORGED TINE STANDARD

QUICK-REPLACEMENT FORGED TINE

FORGED TINE PLUS

QUICK-REPLACEMENT FORGED TINE PLUS

PRESENT ON THE FOLLOWING MODELS:

RMAX

DMAX

Alpego gearboxes

Entirely designed in Alpego

GEAR SWITCHING

By switching or replacing the gear pair it is possible to obtain several different rpm of the rotors. This makes it possible to optimize the work of the power harrow depending on the type of soil, on the forward speed and on the degree of required crumbling.

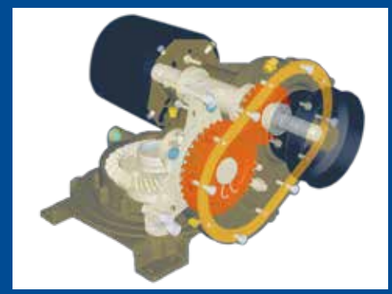

KS GEARBOX

Gearbox 540 or 100 rpm designed and developed in the Alpego premises according to Alpego specs. The switching or the replacement of the gear pair makes it possible to change the number of revolutions of the rotors and this, in turn, makes it possible to optimize the work of the power harrow depending on the type of soil, on the forward speed and on the degree of required crumbling.

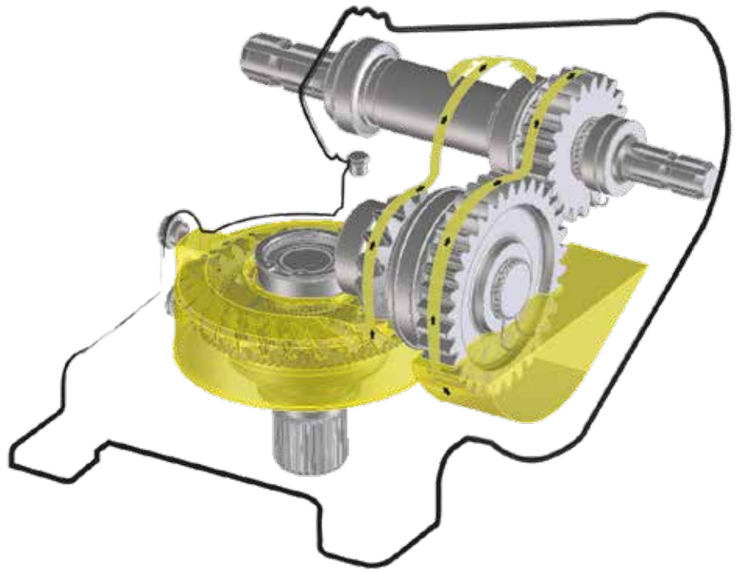

SELF-LUBRICATION

Because the outer casings of the large-dimension bevel gears are enveloping them, these are able to perform a very important self-lubrication, while cooling all internal components at the same time. Thanks to this solution the Alpego power harrows do not need any further cooling systems.

CS GEARBOX

1000 rpm gearbox designed and developed according to Alpego specs. The switching or the replacement of th gear pair makes it possible to change the number of revolutions of the rotors with a wide range up to 500 rpm without risking to damage the gearbox itself. The bevel gear with helical teeth guarantees the utmost efficiency and sturdiness of the system up to 500 HP. The large surface of the components guarantees a remarkable thermal dissipation.

ALPEGO LUBRICANTS

Alpego has always invested in research and development of lubricants with specific characteristics for the use in own machines. Thanks to these features, power harrows benefit from a longer life and optimal functioning of mechanical components.

The advantages of our power harrows

Details that make a difference

FLOATING REAR ROLLER MOUNTED ON A PARALLELOGRAM

With the PARALLELOGRAM system for the adjustment of the working depth the rear roller maintains a constant angle of inclination, therefore:
- the levelling bar remains always adjusted
- in the combination with a seed-drill the seed-drilling coulters maintain a constant pressure.

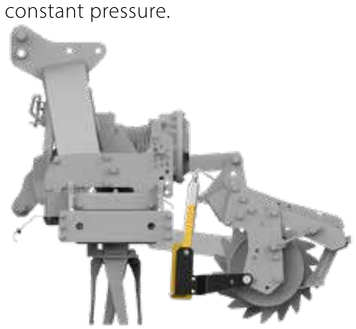

LEVELLING BAR ATTACHED TO THE REAR ROLLER

This solution improves the crumbling quality while decreasing the power absorption. When changing the working depth of the power harrow the levelling bar and the rear roller maintain a constant levelling of the soil. Moreover, at the end of the field it is possible to level the residual soil, thereby avoiding unpleasant accumulations.

SET OF QUICK REPLACEMENT OF THE TINES

Simple, safe and fast operation without the need for any tool.
A set of the quick replacement tines can be supplied separately as an alternative to the traditional system, or it can be mounted directly by the manufacturer and it represents a further protection for the tine-supporting plate.

OSCILLATING FRAMES

The 2 folding sections can follow the unevenness of the soil thanks to a floating system (excursion of 20° upwards or downwards) or be rigid.

DJ

Foldable power harrow for tractors up to 220 HP and working width up to 5m

The folding power harrow ROTODENT DJ is made of high strength steel, offering high structural performances while light in weight. It is available in the working widths 360, 400, 460 SUPER and 500 Super. It is ideal for tractors from 90 to 220 HP.

TRANSPORT WIDTH 2,50 M.

LEVELLING BAR MOUNTED ON THE ROLLER 4

1 BALL-BEARING MECHANICS

2 FOLDING WITH AUTOMATIC LOCKING

3 OSCILLATING 3-POINT HITCH

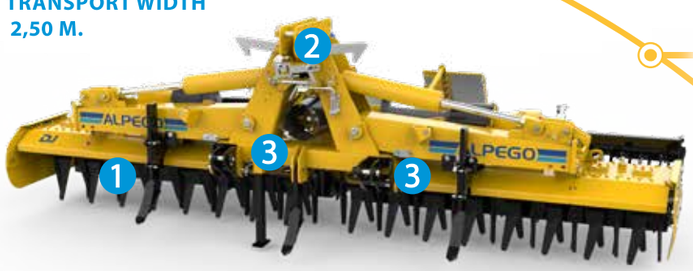

	DJ-360	DJ-400	DJ-460	DJ-500
Working width (mm)	3600	4000	4600	5000
Transport width (mm)	2500	2500	2500	2500
Tractor power (HP)	90-180	100-180	110-220	120-220
Working depth (mm)	250	250	250	250
Rotors (n°)	14	16	18	20
Tines (n°)	14+14	16+16	18+18	20+20
Weight with Packer roller (Kg)	1800	1970	2170	2290
Weight with Cage roller (Kg)	1580	1740	1920	2010
Weight with Spiral roller (Kg)	1640	1780	1990	2070
Weight with Spike roller (Kg)	1580	1740	1940	2020
Weight with Crumb roller (Kg)	-		-	2340

N.B.: the weight includes the universal joint with a shear-bolt safety

1 BALL-BEARING MECHANICS
The ball-bearing mechanics is used in a wide range of power harrows of up to 6 meters and it guarantees very good structural performances for tractors of up to 270 HP. Equipped standard with front guards which prevent stones from entering and damaging the rotors. The models equipped with this solution are ideal for the preparatio of the seedbed.

2 FOLDING WITH AUTOMATIC LOCKING
Automatic hydraulic unlocking during the unfolding of the machine.

3 OSCILLATING 3-POINT HITCH
Oscillating hitching unit to the tractor for a better adjustment to the soil even under highly bumpy conditions.

4 LEVELLING BAR MOUNTED ON THE ROLLER
It is mounted on the rear roller, thus improving the levelling and crumbling quality and decreasing the power absorption.

5 EQUIPMENT
Oscillating 3-point hitch to the tractor of 2nd. and 3rd. category/Gearbox 1000 rpm/universal joint with shear-bolt safety or automatic clutch/Rear lights supplied standard/ Central track eraser.

DP

Foldable power harrow for tractors up to 270 HP and working width up to 6m

The folding power harrow ROTODENT DP, made of high strength steel is available in the working widths 4, 5 and 6 mt. and it is ideal for tractors from 120 to 270 HP.

TRANSPORT WIDTH 2,50 M.

HALF-ROCK GUARDS 3 SUPPLIED STANDARD

FLOATING REAR ROLLER 4 MOUNTED ON A PARALLELOGRAM

1 BALL-BEARING MECHANICS

2 FRAME MADE OF HIGH-TENSILE STEEL FOR COMBINATION WITH A SEED-DRILL

	DP-400	DP-500	DP-600
Working width (mm)	4000	5000	6000
Transport width (mm)	2500	2500	2500
Tractor power (HP)	120-270	140-270	150-270
Working depth (mm)	250	250	250
Rotors (n°)	16	20	24
Tines (n°)	16+16	20+20	24+24
Weight with Packer roller (Kg)	2480	2800	3110
Weight with Cage roller (Kg)	2260	2510	2810
Weight with Spiral roller (Kg)	2280	2560	2810
Weight with Spike roller (Kg)	2300	2590	2850
Weight with Crumb roller (Kg)	-	2710	3010

N.B.: the weight includes the universal joint with a shear-bolt safety

1 BALL-BEARING MECHANICS
The ball-bearing mechanics is used in a wide range of power harrows of up to 6 meters and it guarantees very good structural performances for tractors of up to 270 HP. Equipped standard with front guards which prevent stones from entering and damaging the rotors. The models equipped with this solution are ideal for the preparatio of the seedbed.

2 FRAME MADE OF HIGH-TENSILE STEEL FOR COMBINATION WITH A SEED-DRILL
The steel structure supports heavy loads.

3 HALF-ROCK GUARDS SUPPLIED STANDARD
The half-rock guards not only protect the rotors against wear and tear, they also improve the crumbling of the soil and the work quality.

4 FLOATING REAR ROLLER MOUNTED ON A PARALLELOGRAM
The rear roller maintains a constant angle of inclination when the working depth is changed.

5 EQUIPMENT
3-point hitch to the tractor of 2nd. and 3rd. category/ Gearbox 1000 rpm/ Universal joint with shear-bolt safety or automatic clutch/ Rear lights supplied standard/ Central track eraser.

DKTOP

Foldable power harrow for tractors up to 350 HP and working width up to 6m

The ROTODENT DK TOP is a professional folding power harrow thanks to its TWIN-FORCE tine support with tapered roller bearings is particularly suited in combination with seed drills and it is available in the working widths 4, 4.5, 5 and 6 mt. It is ideal for tractors from 130 to 350 HP.

TRANSPORT WIDTH 2,50 M.

1 TWIN-FORCE K MECHANICS

2 FLOATING LATERAL FRAMES

5 NEW 3-POINT HITCHES OF 3/4TH. CATEGORY

6 NEW LATERAL FRAMES

7 NEW STONE GUARDS

LEVELLING BAR MOUNTED ON THE ROLLER 3

FLOATING REAR ROLLER MOUNTED ON A PARALLELOGRAM 4

HIGH-RESISTANCE STEEL STRUCTURE 8

	DKTOP-400	DKTOP-450	DKTOP-500	DKTOP-600
Working width (mm)	4032	4503	4971	5911
Transport width (mm)	2500	2500	2500	2500
Tractor power (HP)	150-350	110-350	160-350	175-350
Working depth (mm)	280	280	280	280
Rotors (n°)	16	18	20	24
Tines (n°)	16+16	18+18	20+20	24+24
Weight with Packer roller (Kg)	2760	2985	3120	3490
Weight with Cage roller (Kg)	2540	2730	2830	3140
Weight with Spiral roller (Kg)	2560	2765	2880	3190
Weight with Spike roller (Kg)	2580	2790	2910	3230
Weight with Trapeze roller (Kg)	3120	3390	3570	4030
Weight with Otico roller (Kg)	2850	3085	3230	3670

N.B.: the weight includes the universal joint with an automatic clutch

1 TWIN-FORCE K MECHANICS
The patented Twin-Force K mechanics, used in the professional models is ideal for the deepest cultivation and in combined machines. The machines equipped with this solution are suited to be hitched to high power tractors.

2 FLOATING LATERAL FRAMES
The 2 folding sections can follow the unevenness of the soil thanks to a floating system (excursion of 20° upwards or downwards) or be rigid.

3 LEVELLING BAR MOUNTED ON THE ROLLER
It is mounted on the rear roller, thus improving the levelling and crumbling quality and decreasing the power absorption.

4 FLOATING REAR ROLLER MOUNTED ON A PARALLELOGRAM
The rear roller maintains a constant angle of inclination when the working depth is changed.

5 NEW 3-POINT HITCHES OF 3/4TH. CATEGORY
In order to make our power harrows compatible with high-power tractors, we have developed 3-point hitches of 3/4th. cat.

6 NEW LATERAL FRAMES
The new DK-TOP features new shaped lateral plates with wearproof skids. The new design fosters the best flow of the soil toward the rear rollers.

7 NEW STONE GUARDS
In order to prevent stones from penetrating between the rotors, we have developed even more efficient stone guards.

8 HIGH-RESISTANCE STEEL STRUCTURE
Frame made of high quality steel to ensure maximum resistance.

9 EQUIPMENT
3-point hitch to the tractor of 3rd. and 4th. category/ Gearbox 1000 rpm/ Universal joint with shear-bolt safety or automatic clutch/ Rear lights supplied standard with wiring/ Central track eraser.

DMAX

Foldable power harrow for tractors up to 500 HP and working width up to 8m

The ROTODENT DmaX is a folding power harrow unique in its category. Its strong point is the TWIN-FORCE "MAX" mechanical peculiarity and its heavy-duty structure. It is available in the working widths 4.5 and 5, 6, 7 and 8 m. for tractors from 180 to 500 HP.

AI-GUARD

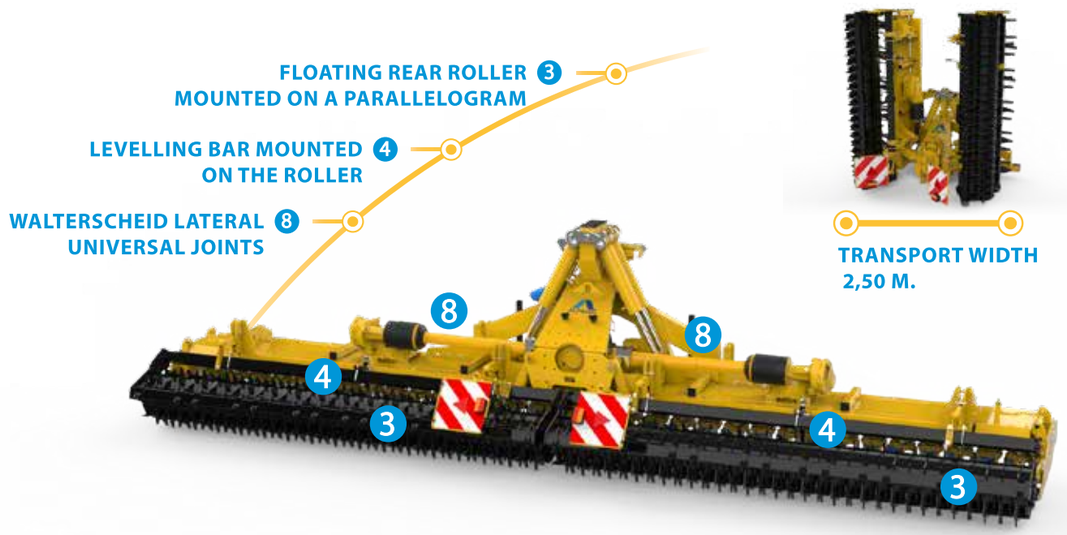

	DMAX-450	DMAX-500	DMAX-600	DMAX-700	DMAX-800
Working width (mm)	4562	5032	5972	6914	7854
Transport width (mm)	2500	2500	2500	2500	2500
Tractor power (HP)	180-440	180-440	200-440	250-500	250-500
Working depth (mm)	300	300	300	300	300
Rotors (n°)	18	20	24	28	32
Tines (n°)	18+18	20+20	24+24	28+28	32+32
Weight with Packer roller (Kg)	3035	3590	4000	4720	5240
Weight with Cage roller (Kg)	2780	3300	3650	4340	4670
Weight with Spiral roller (Kg)	2815	3350	3700	4430	4770
Weight with Spike roller (Kg)	2840	3380	3740	4440	4790
Weight with Trapeze roller (Kg)	3440	4040	4540	5300	5650
Weight with Otico roller (Kg)	3135	3700	4180	-	5370

N.B.: the weight includes the universal joint with an automatic clutch

1 TWIN FORCE MAX MECHANICS
The patented solution Twin-Force MAX, used in the top-of-the-range professional models further improves the structural features and yields the utmost reliability in the use of very high power tractors of up to 500 HP.

2 FLOATING LATERAL FRAMES
The 2 folding sections can follow the unevenness of the soil thanks to a floating system (excursion of 20° upwards or downwards) or be rigid.

3 FLOATING REAR ROLLER MOUNTED ON A PARALLELOGRAM
The rear roller maintains a constant angle of inclination when the working depth is changed.

4 LEVELLING BAR MOUNTED ON THE ROLLER
It is mounted on the rear roller, thus improving the levelling and crumbling quality and decreasing the power absorption.

5 COMBINATION WITH SEED-DRILL UP TO 8 METERS
The high load capacity of the frame permits the Dmax power harrows to be combined with seed-drills and other types of implements.

6 A.I. GUARD
The AI-GUARD, belonging to the AI package, foresees the monitoring of several parameters of the machine. From the monitor it is possible to check the temperature of the mechanical transmissions and the number of revolutions of said transmissions. Visual/acustic alarms warn when the critical levels are exceeded. Moreover, the system gives advices concerning programmed maintenance operations.

7 CS GEARBOX
1000 rpm gearbox developed according to Alpego specs. The switching or the replacement of the gear pair makes it possible to change the number of revolutions of the rotors from 200 to 500 rpm. The bevel gear with helical teeth guarantees the utmost efficiency of the system up to 500 HP. The large surface of the components guarantees a remarkable thermal dissipation.

8 LATERAL UNIVERSAL JOINTS
Walterscheid lateral universal joints with an automatic clutch supplied standard. In the 700 and 800 models they are suitably larger.

9 EQUIPMENT
Rigid and oscillating 3-point hitch to the tractor of 3rd. and 4th. cat. and of 4th.N rigid USA category/ Dual-speed lateral gearboxes 1000 rpm/ Rear lights supplied standard/ Forged tines/ Central track eraser

Power harrow
Rotodent DmaX

BD2

Rigid power harrow for tractors up to 120 HP and working width up to 2m

The strong and compact rigid power harrow ROTODENT BD2 is available in the working widths 1.6, 1.8 and 2.05 m. It is ideal for tractors from 45 to 120 HP.

	BD2-140	BD2-160	BD2-180	BD2-205
Working width (mm)	1363	1598	1833	2068
Transport width (mm)	1385	1620	1855	2090
Tractor power (HP)	40-100	45-100	55-120	70-120
Working depth (mm)	250	250	250	250
Rotors (n°)	5	6	7	8
Tines (n°)	6(dx)+4(sx)	6+6	8(dx)+6(sx)	8+8
Weight with Packer roller (Kg)	595	670	760	805
Weight with Cage roller (Kg)	515	575	650	690
Weight with Spiral roller (Kg)	475	590	670	710
Weight with Spike roller (Kg)	515	585	650	690

N.B.: the weight includes the universal joint with a shear-bolt safety

1 BALL-BEARING MECHANICS
The ball-bearing mechanics is used in a wide range of power harrows of up to 6 meters and it guarantees very good structural performances for tractors of up to 270 HP. Equipped standard with front guards which prevent stones from entering and damaging the rotors. The models equipped with this solution are ideal for the preparatio of the seedbed.

2 STONE GUARDS
The stone guards prevent stones from getting jammed between the rotors and damaging them.

3 LATERAL PLATES
Lateral plates with a new bevelled profile ideal for narrow paths, such as in vineyards. They are mobile and adjustable in height in 4 positions.

4 COMBINATION WITH THE APE PNEUMATIC SEED-DRILL
The power harrow can easily be combined with the microgranular APE seed-drilll.

5 EQUIPMENT
Oscillating 3-point hitch to tractor of 1st. and 2nd. cat./ Single-speed gearbox 540 rpm/ Universal joint with shear-bolt safety / Levelling bar mounted on the roller.

BE

Rigid power harrow for tractors up to 120 HP and working width up to 3m

The strong, multi-purpose rigid power harrow ROTODENT BE is available in the working widths 2.5 and 3 m.; for tractors from 65 to 120 HP.

	BE-230	BE-250	BE-300
Working width (mm)	2300	2500	2980
Transport width (mm)	2300	2500	3000
Tractor power (HP)	60-120	65-120	70-120
Working depth (mm)	250	250	250
Rotors (n°)	9	10	12
Tines (n°)	8(dx)+10(sx)	10+10	12+12
Weight with Packer roller (Kg)	890	960	1100
Weight with Cage roller (Kg)	765	815	915
Weight with Spiral roller (Kg)	780	845	950
Weight with Spike roller (Kg)	765	815	930
Weight with Crumb roller (Kg)	910	980	1120

N.B.: the weight includes the universal joint with a shear-bolt safety

1 BALL-BEARING MECHANICS
The ball-bearing mechanics is used in a wide range of power harrows of up to 6 meters and it guarantees very good structural performances for tractors of up to 270 HP. Equipped standard with front guards which prevent stones from entering and damaging the rotors. The models equipped with this solution are ideal for the preparatio of the seedbed.

2 STONE GUARDS
The stone guards prevent stones from getting jammed between the rotors and damaging them.

3 LEVELLING BAR MOUNTED ON THE ROLLER
It is mounted on the rear roller, thus improving the levelling and crumbling quality and decreasing the power absorption.

4 HIGH-RESILIANCE FRAME PRESET FOR AN HYDRAULIC 3-POINT HITCH
The structure made of steel supports heavy loads.

5 EQUIPMENT
Oscillating 3-point hitch to tractor of 2nd. cat./ Single-speed gearbox 540 rpm/ Universal joint with shear-bolt safety.

BF

Rigid power harrow for tractors up to 140 HP and working width up to 3m

The professional rigid power harrow ROTODENT BF is available in the working widths 2.5 and 3 m. and it is ideal for tractors from 65 to 140 HP.

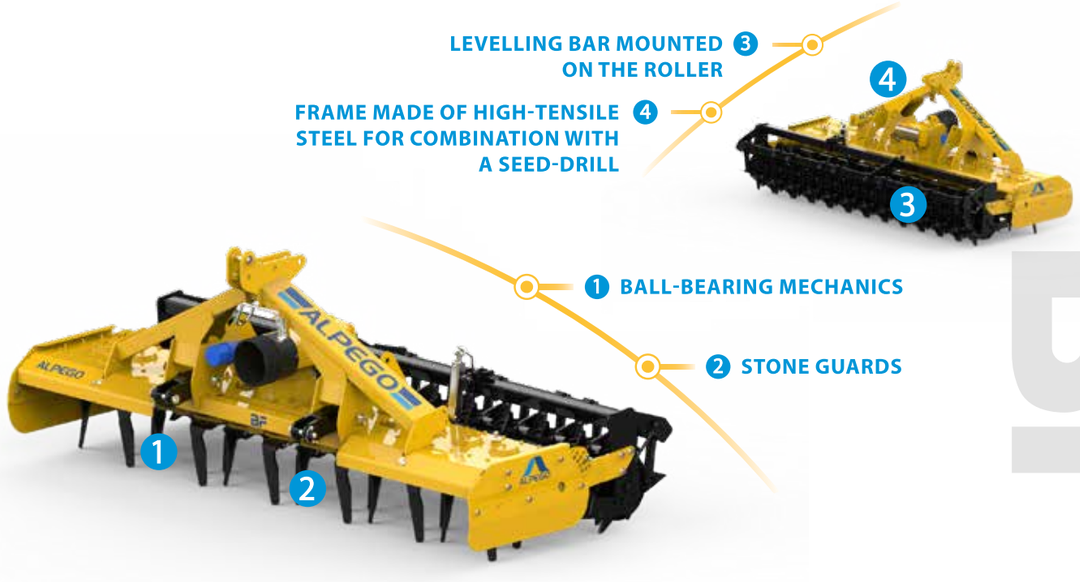

	BF-250	BF-300
Working width (mm)	2500	2980
Transport width (mm)	2500	3000
Tractor power (HP)	64-140	75-140
Working depth (mm)	250	250
Rotors (n°)	10	12
Tines (n°)	10+10	12+12
Weight with Packer roller (Kg)	1015	1150
Weight with Cage roller (Kg)	875	975
Weight with Spiral roller (Kg)	905	1010
Weight with Spike roller (Kg)	880	990
Weight with Crumb roller (Kg)	1040	1180

N.B.: the weight includes the universal joint with a shear-bolt safety

1 BALL-BEARING MECHANICS
The ball-bearing mechanics is used in a wide range of power harrows of up to 6 meters and it guarantees very good structural performances for tractors of up to 270 HP. Equipped standard with front guards which prevent stones from entering and damaging the rotors. The models equipped with this solution are ideal for the preparatio of the seedbed.

2 STONE GUARDS
The stone guards prevent stones from getting jammed between the rotors and damaging them.

3 LEVELLING BAR MOUNTED ON THE ROLLER
It is mounted on the rear roller, thus improving the levelling and crumbling quality and decreasing the power absorption.

4 FRAME MADE OF HIGH-TENSILE STEEL FOR COMBINATION WITH A SEED-DRILL
The steel structure supports heavy loads.

5 EQUIPMENT
Oscillating 3-point hitch to tractor of 2nd. cat./ Gearbox 540 rpm with central Pto/ Universal joint with shear-bolt safety.

RM

Rigid power harrow for tractors up to 170 HP and working width up to 4m

The professional rigid power harrow ROTODENT RM, thanks to its TWIN-FORCE tine support with tapered roller bearings is available in the working widths 3, 3.5 SUPER and 4m SUPER and it is ideal for tractors from 80 to 170 HP.

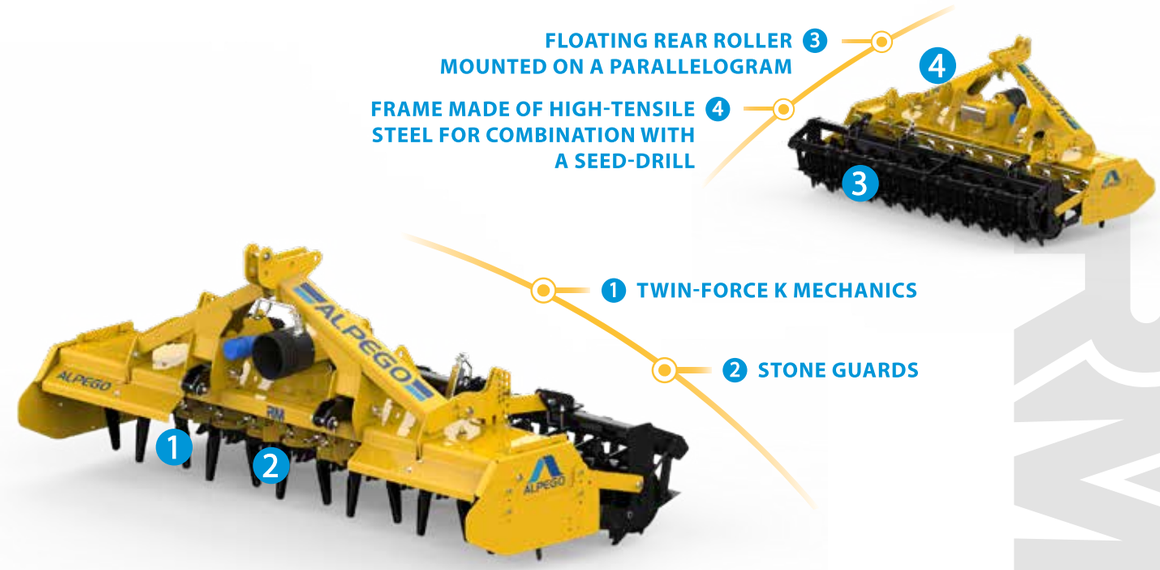

	RM-300	RM-350	RM-400
Working width (mm)	2980	3480	3980
Transport width (mm)	3000	3500	4000
Tractor power (HP)	80-150	90-170	100-170
Working depth (mm)	280	280	280
Rotors (n°)	12	14	16
Tines (n°)	12+12	14+14	16+16
Weight with Packer roller (Kg)	1395	1635	1900
Weight with Cage roller (Kg)	1210	1445	1635
Weight with Spiral roller (Kg)	1245	1490	1685
Weight with Spike roller (Kg)	1225	1495	1660
Weight with Crumb roller (Kg)	1325	1485	1685

N.B.: the weight includes the universal joint with a shear-bolt safety

1 TWIN-FORCE K MECHANICS
The patented Twin-Force K mechanics, used in the professional models is ideal for the deepest cultivation and in combined machines. The machines equipped with this solution are suited to be hitched to high power tractors.

2 STONE GUARDS
The stone guards prevent stones from getting jammed between the rotors and damaging them.

3 FLOATING REAR ROLLER MOUNTED ON A PARALLELOGRAM WITH LEVELLING BAR
The rear roller maintains a constant angle of inclination when the working depth is changed.

4 FRAME MADE OF HIGH-TENSILE STEEL FOR COMBINATION WITH A SEED-DRILL
The steel structure supports heavy loads.

5 EQUIPMENT
Oscillating 3-point hitch to tractor of 2nd. cat./ Gearbox 1000 rpm/ Universal joint with shear-bolt safety or automatic clutch.

RK

Rigid power harrow for tractors up to 200 HP and working width up to 4m

The professional rigid power harrow ROTODENT RK, thanks to its TWIN-FORCE tine support with tapered roller bearings is particularly suited in combination with seed drills and it is available in the working widths 3, 3.5 and 4 m. It is ideal for tractors from 90 to 200 HP.

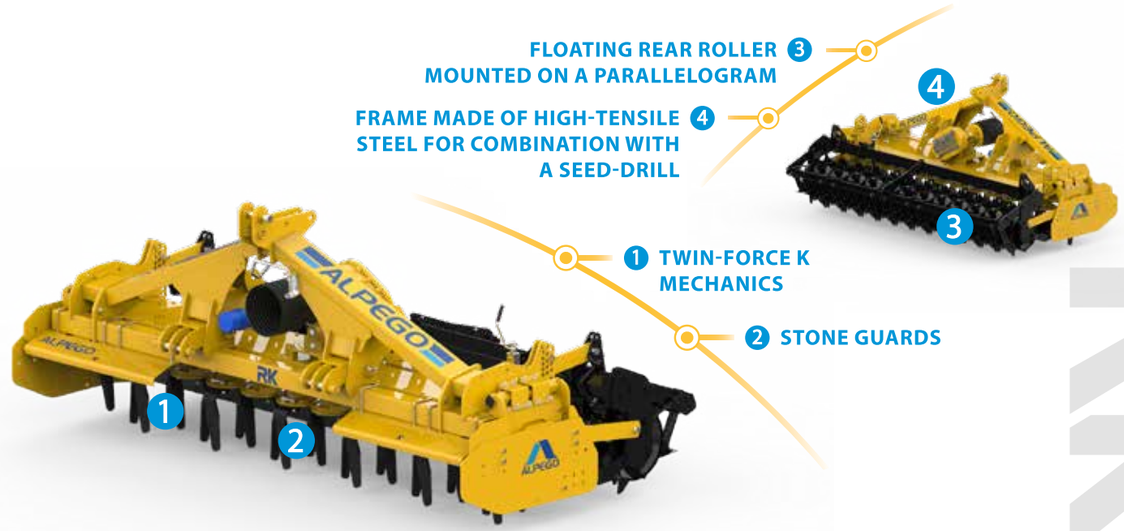

	RM-300	RM-350	RM-400
Working width (mm)	2985	3455	4076
Transport width (mm)	3000	3500	4000
Tractor power (HP)	90-200	100-200	120-200
Working depth (mm)	280	280	280
Rotors (n°)	12	14	16
Tines (n°)	12+12	14+14	16+16
Weight with Packer roller (Kg)	1625	1785	2070
Weight with Cage roller (Kg)	1450	1595	1805
Weight with Spiral roller (Kg)	1470	1640	1855
Weight with Spike roller (Kg)	1495	1645	1830
Weight with Trapeze roller (Kg)	1895	2075	2295
Weight with Otico roller (Kg)	1715	-	2125

N.B.: the weight includes the universal joint with an automatic clutch

1 TWIN-FORCE K MECHANICS
The patented Twin-Force K mechanics, used in the professional models is ideal for the deepest cultivation and in combined machines. The machines equipped with this solution are suited to be hitched to high power tractors.

2 STONE GUARDS
The stone guards prevent stones from getting jammed between the rotors and damaging them.

3 FLOATING REAR ROLLER MOUNTED ON A PARALLELOGRAM WITH LEVELLING BAR
The rear roller maintains a constant angle of inclination when the working depth is changed.

4 FRAME MADE OF HIGH-TENSILE STEEL FOR COMBINATION WITH A SEED-DRILL
The steel structure supports heavy loads.

5 EQUIPMENT
Oscillating 3-point hitch to tractor of 3rd. cat./ Gearbox 1000 rpm/ Universal joint with shear-bolt safety or automatic clutch.

RMAX

Rigid power harrow for tractors up to 320 HP and working width up to 4m

The ROTODENT RmaX is a rigid power harrow unique in its category. Its strong point is the TWIN-FORCE "MAX" mechanical peculiarity and its heavy-duty structure. It is available in the working widths 3, 3.5 and 4 m. for tractors from 120 to 320 HP.

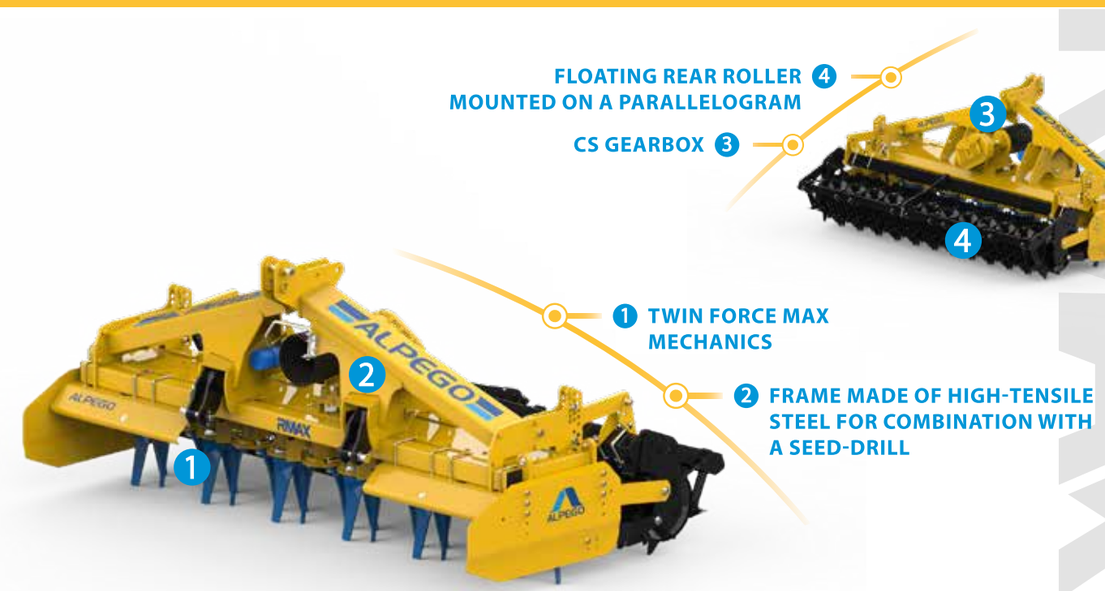

	RMAX-300	RMAX-350	RMAX-400
Working width (mm)	2940	3410	4030
Transport width (mm)	3000	3500	4000
Tractor power (HP)	120-320	130-320	140-320
Working depth (mm)	300	300	300
Rotors (n°)	12	14	16
Tines (n°)	12+12	14+14	16+16
Weight with Packer roller (Kg)	1910	2140	2325
Weight with Cage roller (Kg)	1655	1860	2100
Weight with Spiral roller (Kg)	1685	1905	2150
Weight with Spike roller (Kg)	1700	1910	2125
Weight with Trapeze roller (Kg)	2025	2270	2590
Weight with Otico roller (Kg)	1890	-	2420

N.B.: the weight includes the universal joint with an automatic clutch

1 TWIN FORCE MAX MECHANICS
The patented solution Twin-Force MAX, used in the top-of-the-range professional models further improves the structural features and yields the utmost reliability in the use of very high power tractors of up to 500 HP.

2 FRAME MADE OF HIGH-TENSILE STEEL FOR COMBINATION WITH A SEED-DRILL
The steel structure supports heavy loads.

3 CS GEARBOX
1000 rpm gearbox developed according to Alpego specs. The number of revolutions of the rotors can be changed from 200 to 500 rpm. Efficiency of this system up to 500 HP. It guarantees a high thermal dispersion.

4 FLOATING REAR ROLLER MOUNTED ON A PARALLELOGRAM
The rear roller maintains a constant angle of inclination when the working depth is changed.

5 EQUIPMENT
Oscillating 3-point hitch to tractor of 3rd. cat./ Gearbox 1000 rpm/ Universal joint with automatic clutch / Levelling bar mounted on the roller.

Which seed-drill for which power harrow?

You only need to choose according to your needs

		BD2	BF	RM	RK	RmaX	DP	DKTOP	DmaX
APE	The pneumatic APE seed-drill has been developed for the distribution of single, granular seeds or grass-mixtures in vineyards and orchards, also for the green-manure technique.	■							
JET-M	The JET-M seed-drill focuses on the simplicity of use and on utmost versatility. It can be combined with tractors from 110 to 200 HP.		■ * only for the FAST version	■	■				
JET-X	Jet-X has been created for professional and intensive agriculture under the most demanding conditions. It can work combined with tractors of up to 320 HP.				■	■			
ASPro	The front hopper Fertidrill AsPro with a single metering unit is made entirely of stainless steel and is the versatile solution for seeding or fertilizing the soil.			■	■	■	■	■	■
ASMax	The Fertidrill ASmaX multifunction hopper with a dual metering unit is completely made of stainless steel and can be used with seed and fertilizer at the same time.						■	■	■

Choosing the options

The correct option for any situation

TRACK ERASER KIT

HALF-ROCK GUARDS SET

HYDRAULIC LINKAGE FOR SEED-DRILL

HYDRAULIC DEPTH ADJUSTMENT

SET OF QUICK-RELEASE TINE FOR THE BALLBEARING RANGE

SET OF FORGED QUICK-RELEASE TINES

KIT REAR PTO

LEVELLING BAR ADJUSTMENT

SET FOR THE ASSEMBLY OF BROADCAST SEED-DRILL

Accessories and rollers	BD2	BE	BF	RM	RK	RMAX	DJ	DP	DKTOP	DMAX
Track eraser kit	■	■	■	■	■	■	■	■	■	■
Half-rock guards set	■	■	■				■			
Hydraulic linkage for seed-drill		■	■	■	■	■		■	■	■
Hydraulic depth adjustment	■	■	■	■	■	■	■	■	■	■
Set of quick-release tine for the ballbearing range							■	■		
Set of forged quick-release tines					■	■			■	■
Kit rear Pto.			■	■	■	■		■	■	
Levelling bar adjustment	■	■	■	■	■	■	■	■	■	■
Set for the assembly of broadcast seed-drill				■	■	■				
Packer roller	■	■	■	■	■	■	■	■	■	■
Cage roller	■	■	■	■	■	■	■	■	■	■
Spiral roller	■	■	■	■	■	■	■	■	■	■
Spike roller	■	■	■	■	■	■	■	■	■	■
Otico roller					■	■			■	■
Trapeze roller					■	■			■	■
Crumb roller		■	■	■			■	■		

The choice of the roller

For a perfect soil tillage

PACKER ROLLER
The Packer roller is the versatile roller for excellence. It offers a distribution of weights on the entire surface. With a diameter of 480, 520 or 570 mm, there is a limited risk of jamming even when the soil is sticky or in the presence of crop residues. The packer roller can work both alone and combined, its versatility allows it to work on light, clayey, silty, dry and tenacious soils.

CAGE ROLLER
CAGE roller is the ideal roller for working dry, medium density soils. The roller is equipped with a rod structure that guarantees optimal reconsolidation.
(ø 420 mm and 500 mm)

SPIRAL ROLLER
The SPIRAL roller creates a soft and uniform seeding surface and is suitable for medium and light soils.
(ø 450 mm e 520 mm)

SPIKE ROLLER
The SPIKE roller is very versatile, it works well even when the soil is damp and compacted.
(ø 480 mm e 560 mm)

OTICO ROLLER
This roller is rubber-coated with the ridges spaced 12.5 cm. The roller is intended for light, moist or clay soils, and it compacts the furrow in which the seed will be laid.
The rubber-covered surface does not allow the soil to stick, especially in the presence of very tacky and sticky soils, however it is not advisable to use in presence of stones.
(ø 500 mm)

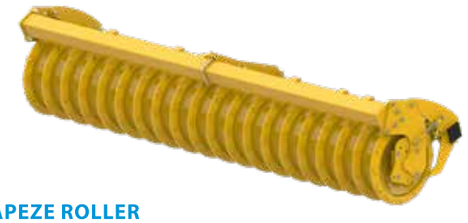

TRAPEZE ROLLER
The notched cast-iron roller ridges are spaced 12.5 cm or 15 cm depending on row spacing.
With its diameter of 505 mm it combines a perfect rotation and a pressing of the seeding line. Designed for the combination can also work alone. It adapts perfectly to all types of dry or wet soil even in the presence of stones or crop residues.

CRUMB ROLLER
The CRUMB roller is suited for working in brittle soils, even when they are heavy and damp and it guarantees a good crumbling and compactation before seeding. (ø 480 mm)

Alpego S.p.a con Socio Unico
Via Giovanni e Giuseppe Cenzato, 9
36045 - Lonigo (VI) Italy
Tel: 0444 646100
Mail: info@alpego.com
www.alpego.com

Q10A0399 Depliant Erpici Rotanti GB
Rev. 00 10/11/2020

RANGE

RIGID POWER HARROWS
40 - 320 HP

FOLDABLE POWER HARROWS
320 - 500 HP

SUBSOILERS
50 - 500 HP

ROTARY CULTIVATORS AND STONE BURIERS
50 - 500 HP

SEED-DRILLS
75 - 320 HP

FRONT HOPPERS
90 - 500 HP

CULTIVATORS
110 - 270 HP

MULCHERS
40-160 HP